AN3151

Application note

Digital constant-current controller for LED applications based on STM8S208X

Introduction

LEDs have been used for many years simply as status indicators but are now playing a considerable role in a host of application fields, even with high power requirements, due to improvements in lighting efficiency, longer lifetime, reliability, and costs. LED-based lighting systems are increasingly used in display panels, emergency lighting, architectural lighting and also backlighting.

The growth of such systems is mainly due to new manufacturing technologies and innovations in this segment area, which probably represent the most important markets within the lighting field.

The intent of this application note is to describe a new technique, based on a digital approach, performing a real average current-control on an LED streetlighting platform.

A demonstration board, based on this approach, is orderable with the STEVAL-ILL031V1 code.

Further details are shown in STEVAL-ILL031V1 documentation.

The LED streetlight platform has been developed on a DC-DC converter based on an “inverse buck” converter, creating advantages in terms of power switch control and conditioning signal circuitry for the current sensing.

Moreover, performance, including cost performance, is also looked at.

This solution has been customized for a streetlighting application but can be extended to many other fields.

The advantages offered are in terms of low energy consumption, low maintenance, and a small and lightweight design.

The real aim of this application note is to describe the average current-control methodology suitable for LED driving.

The effectiveness of the control with the inverse buck's advantages is described on a dimmable platform, based on a multi-string system up to 120 W with independent current control. Two different kinds of dimming have been implemented: analog, also called linear dimming, and digital.

The control has been implemented on the STM8S208RB microcontroller, [1] which is the best compromise in terms of cost and performance, validating an innovative current reading methodology.

August 2010

www.st.com

Contents

1 Hardware 3

1.1 Power stage 4

1.2 Control stage 7

2 Microcontroller peripherals 8

2.1 TIMER1: advanced control timer (TIM1) 9

2.2 AD converter 9

3 Overview of inverse buck converter 10

3.1 Average current reading methodology 12

4 Independent current control for a multi-string system 14

5 Firmware implementation 17

5.1 Basic initialization of peripherals and I/O pins 17

5.2 Peripheral settings 17

5.3 PI regulator overview and firmware implementation 19

6 Board description 23

7 Experimental results 23

8 Short-circuit protection 28

9 Bill of material 30

10 References 32

11 Revision history 33

List of figures

Figure 1. Principle schematic of the circuit described 4
Figure 2. Power stage 5
Figure 3. Control stage 7
Figure 4. TIM1 block diagram 8
Figure 5. TIM1 and ADC triggering functions. 9
Figure 6. Inverse buck converter (single-string). 10
Figure 7. Counter(a), PWM(b) and ILED(c) 13
Figure 8. Multi string current control methodology. 14
Figure 9. Basic flowchart 15
Figure 10. Current control flowchart. 16
Figure 11. PI standard controller with anti-saturation control. 20
Figure 12. LED street light platform 23
Figure 13. ILED on 3 strings (green, blue and violet waveforms); PWM @100 kHz (yellow waveform). 24
Figure 14. ILED on 3 strings (green, blue and violet waveforms); voltage across the sense resistor (yellow waveform). 24
Figure 15. ILED on 3 strings (green, violet and blue waveforms) @ 60% of duty cycle (PWM dimming). 25
Figure 16. ILED on string (violet waveform) @ minimum PWM dimming; PWM (yellow waveform) . . 25
Figure 17. MOSFET turn-on zoom. 26
Figure 18. MOSFET turn-off zoom. 26
Figure 19. Overall efficiency (4 channels) 27
Figure 20. Short-circuit protection circuitry 28
Figure 21. Short-circuit event. 29
Figure 22. Electro-optical characteristics. 31

Hardware

1 Hardware

The hardware is mainly composed of the power conversion section and the control stage, based on the microcontroller unit.

From a common DC voltage input the 4 strings are driven by 4 inverse DC-DC buck converters.

The inverse buck converter offers advantages not only in the driving section and the ground referred circuitry but also in terms of cost.

All these aspects are explained in detail in the power stage.

The principle schematic of the circuit described in this application note is shown in *Figure 1*.

Figure 1. Principle schematic of the circuit described

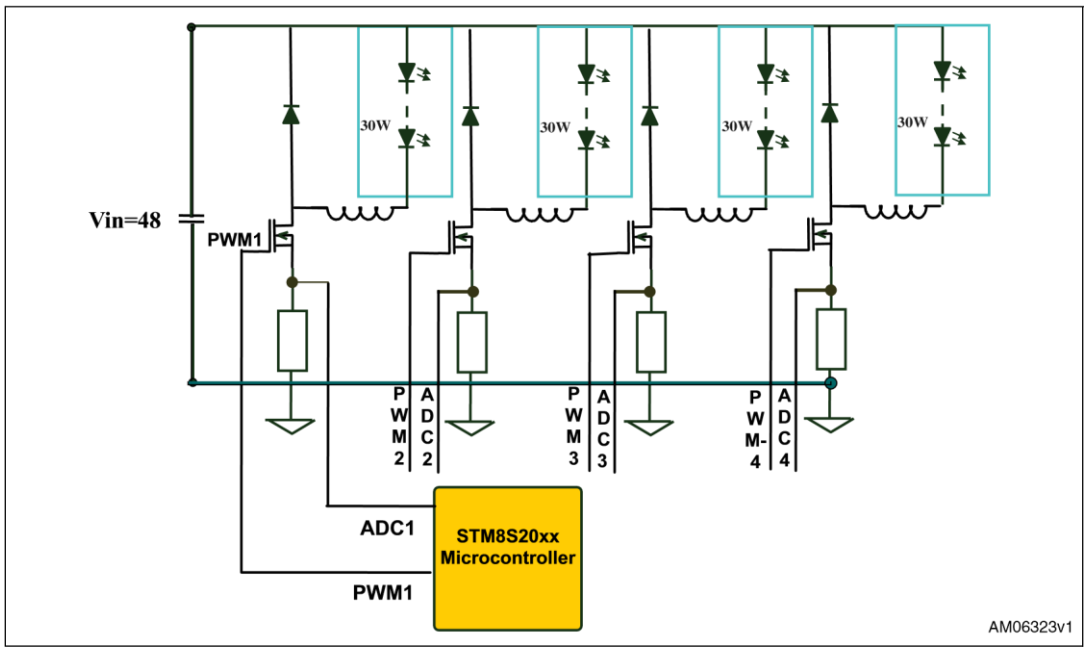

Hardware

1.1 Power stage

Figure 2 shows the schematic of the power stage with 4 output channels:

Figure 2. Power stage

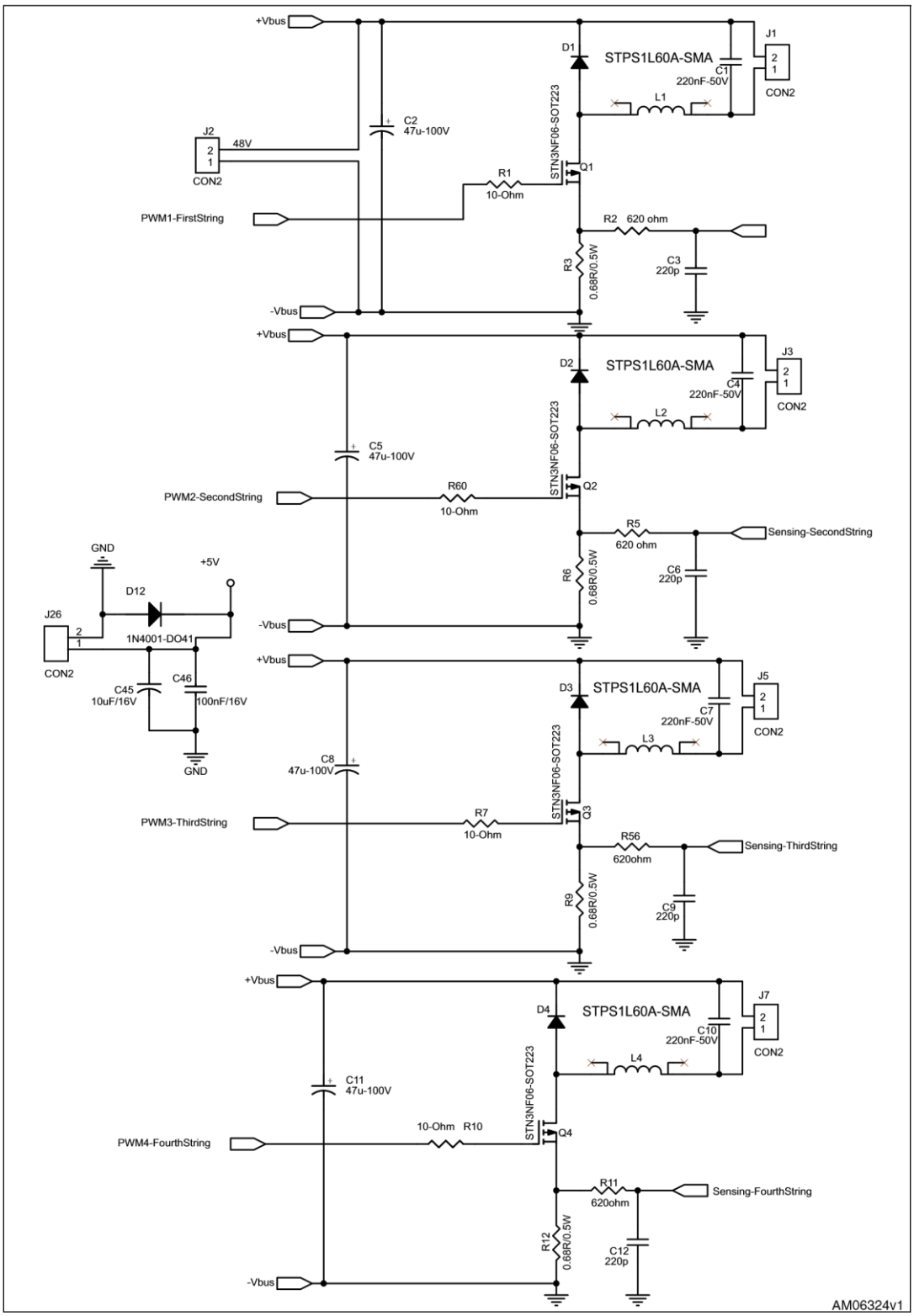

Hardware

Four DC-DC buck converters allow 4 LED strings to be driven, managing up to 120 W. From a 48 DC input voltage the buck stage adapts the output voltage in order to drive the LEDs

with the imposed current. 3 W LEDs have been chosen in order to obtain 30 W per string, covering the total power with 10 LEDs [4] in series on each string.

The buck stage works in continuous conduction mode (CCM) in order to minimize the current ripple on the LEDs.

The inverse buck stage offers:

- Low voltage sensing circuitry
- Logic level MOSFETs driven by the microcontroller without a gate driver (ground referred)
- High efficiency of up to 98 %

The LED current, to be measured by the microcontroller, is sensed by a ground referred shunt resistor. This solution allows the current reading only when the MOSFET is on. This is an important aspect to be evaluated for the current reading methodology to be described.

1.2 Control stage

The control stage is based on an STM8S208RB. A 64-pin package has been used but the application can be easily implemented on smaller packages of the same product family (performance line). PWMs, ADC channels, GPIOs, used for this application, are provided directly to the power stage. *Figure 3* shows the complete schematic:

Figure 3. Control stage

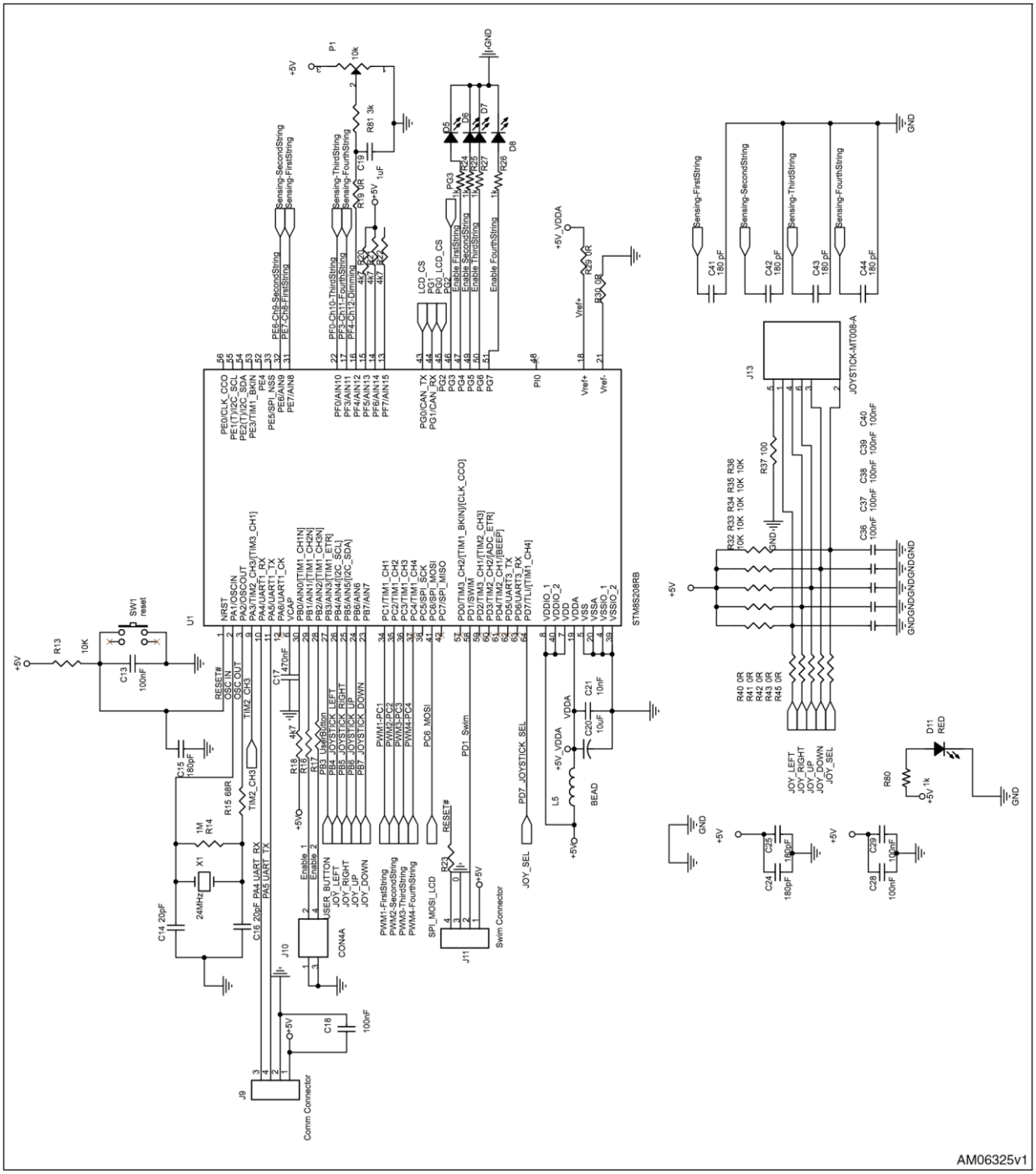

Microcontroller peripherals

2 Microcontroller peripherals

The control is fully dedicated to the microcontroller which is suitable for managing PWM generation, analog sensing, by means of ADC, and executing four independent current loops through PI standard controllers.

2.1 TIMER1: advanced control timer (TIM1)

Figure 4 shows the TIM1 block diagram

Figure 4. TIM1 block diagram

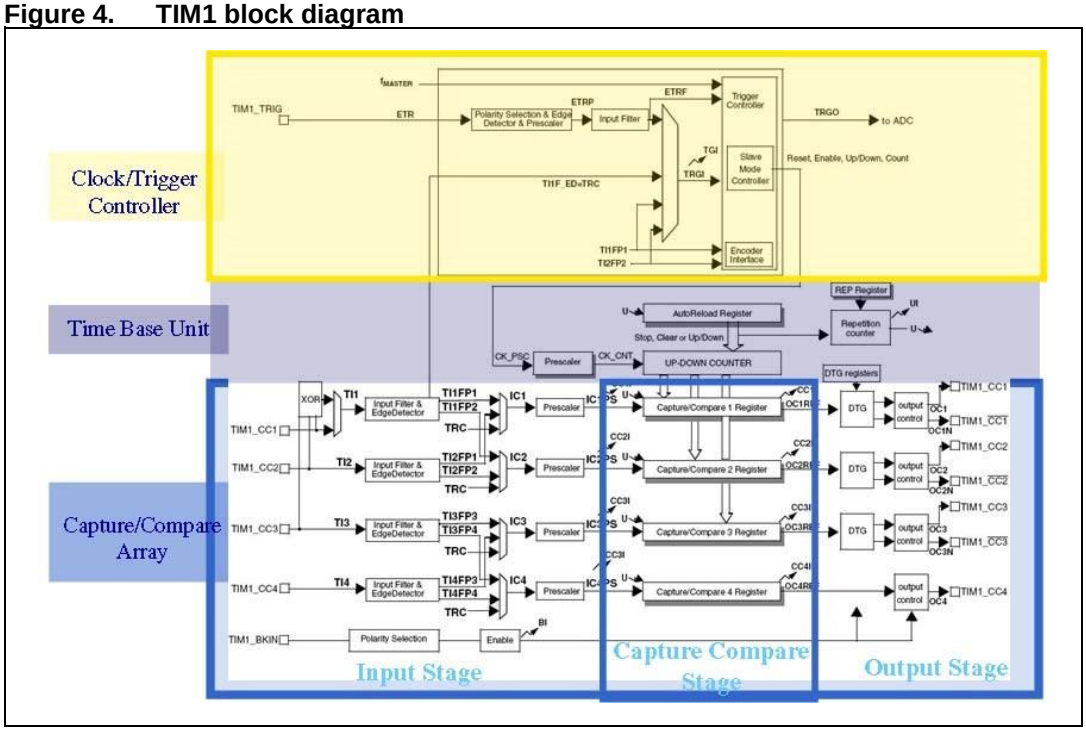

The TIM1 is a 16-bit advanced control timer with many settings and features for industrial and motor control applications including protection for fault management.

The main features are:

- 16-bit Up, Down, and Up/down counter with auto reload function
- 4 independent channels with several configurations (input capture, output compare, edge or center aligned PWM, one pulse mode and complementary outputs)
- Break input
- Interrupt and trigger event

The current reading methodology used in this application needs a trigger event, generated by the timer, in order to start the ADC.

For further details refer to the STM8S reference manual RM0016 [*1*].

Microcontroller peripherals

2.2 AD converter

Some interesting characteristics of this microcontroller are highlighted here, like PWM peripheral and ADC triggering functions conducting to a PI current regulation loop for every channel.

Figure 5. TIM1 and ADC triggering functions

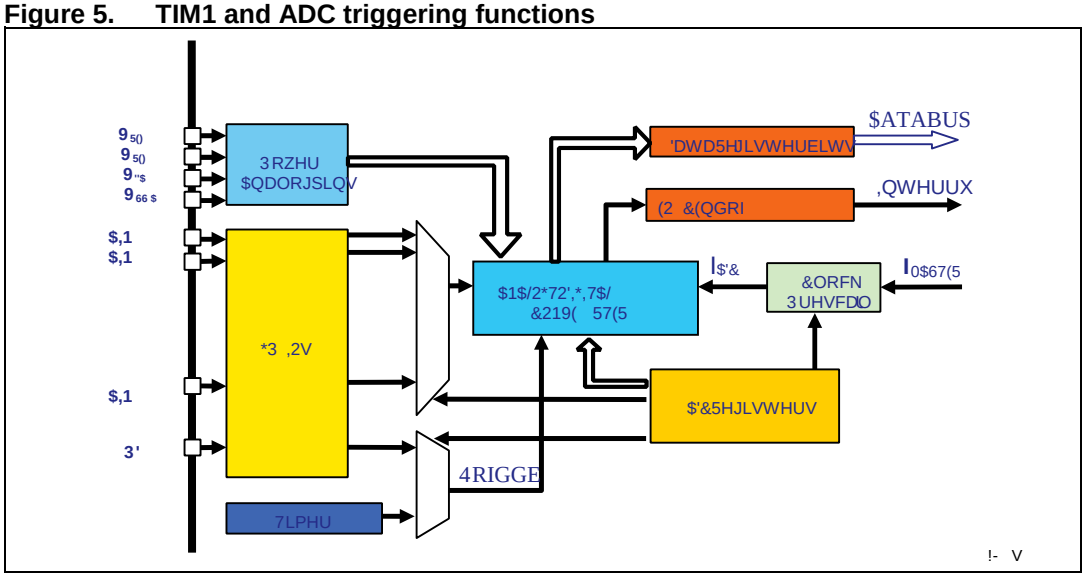

In *Figure 5* above, the ADC peripheral block diagram is shown. The main ADC features used in this application are:

- 10-bit with 16 multiplexed channels
- 3.5 µs of conversion time @ 4 MHz
- External trigger and timer trigger selection
- End of conversion interrupt

The most important feature is the triggering function, forced by TIM1, used to enable the conversion on some timer events (reset, enable, up/down, and count).

Overview of inverse buck converter

3 Overview of inverse buck converter

The inverse buck stage offers the advantages previously mentioned and is managed by the same equations as the standard buck converter.

Here in short, some details related to the DC-DC converter stage, with further details of the analog designing [*3*].

Theory of operation

The voltage across the L inductor is calculated using the following formula:

Equation 1

$$V_L = L \frac{di_L}{dt}$$

where:

- V_L=inductor voltage (V)
- L=inductance (H)

- I_L=inductor current (A)

Figure 6. Inverse buck converter (single-string)

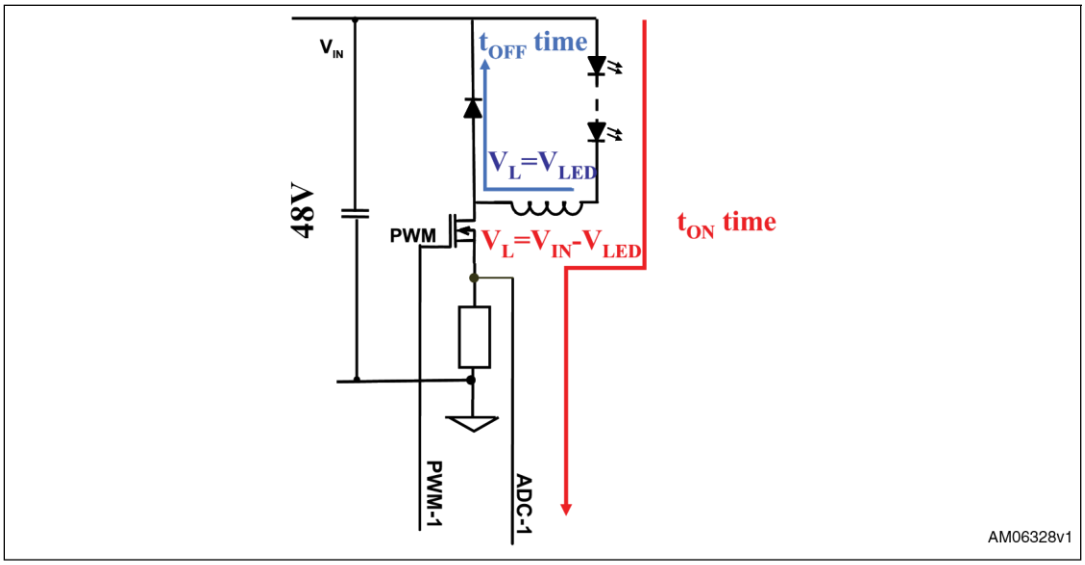

The following equations were used in the design:

Table 1. Electrical specs

Description	Symbol	Value	Unit
Input voltage	V_{IN}	48	V
White LED	V_F	Everlight EHP-AX08EL P03-V4	
LED forward voltage		V_{fmin}=3.85 @ 700 mA V_{fmax}=4.15 @ 700 mA	V

Overview of inverse buck converter

Table 1. Electrical specs (continued)

Description	Symbol	Value	Unit
I_{LEDAVG} = Average LED current	ΔI_{LED}	10	%
Ripple current on the LEDs			

The output voltage $=V_{LED} = N^* V_F$(Typical)=40 V

Where N=Number of LEDs per string=10 and V_f is the typical forward voltage (4 V).

Forward voltage has some variation in respect to the typical value and the LED manufacturer reports also the minimum forward voltage V_{fmin} and maximum forward voltage V_{fmax}.

These values must be considered for dimensioning of the power converter.

The LED characteristics are strongly dependent on manufacturer and are reported in their corresponding datasheets.

In particular, these are necessary to calculate the duty cycle variation range.

Design spec calculation:

Equation 2

$$V_{OUTmin} = V_{LEDmin} = N*V_{fmin} = 10*3.85\ V = 38.5\ V$$

Equation 3

$$V_{OUTmax} = V_{LEDmax} = N*V_{fmax} = 10*4.15\ V = 41.5\ V$$

δ=Ton/Ts and expressed in terms of voltage for a buck converter:

Equation 4

$$\delta = Vout/Vin$$

Equation 5

$$\delta min = V_{OUTmin}/Vin = 80.2\ \%$$

Equation 6

$$\delta max = V_{OUTmax}/Vin = 86.4\ \%$$

The current ripple admitted for this application is less than 10 % depending on the following formula:

Equation 7

$$\Delta I_{LED} = \Delta I_L \leq 10\%$$

$$\Delta I_L = \frac{VoutFs}{L} * \left(1 - \frac{VoutVin_{min}}{}\right)$$

Overview of inverse buck converter

where:

Fs= 100 kHz is the switching frequency; obtaining an inductance value of 1mH. A smaller value of 820 uH has been chosen for space saving reasons.

3.1 Average current reading methodology

The current reading methodology is based on an innovative technique suitable for the DCDC stage (inverse buck) working in continuous conduction mode (CCM) or even in transition mode.

The aim is to control the current because the LEDs need a current control in order to maximize lifetime and brightness, and guarantee the technical specs provided by the LED manufacturers.

The most important target is to maintain a constant current even though, for thermal issue, the typical forward voltage can change.

This technique has been patented and is based on microcontroller peripherals allowing the LEDs current to be sensed, flowing during the MOSFET conduction, on the Ton/2 event.

The Ton/2 current reading and conversion, by the microcontroller, allows the average current value to be estimated.

The current reading has been implemented on an STM8S208RB but can be easily implemented on the STM8S2x product family.

The most important feature of this microcontroller is the ADC triggering function by some timer events. Further details can be seen in the reference manual [*1*].

The current sense has been obtained avoiding any external circuitry. The sense resistor is chosen in order to have the best compromise between signal noise ratio and power dissipation issues. Below are some waveforms describing the proposed technique. The PWM counter is configured in the center-aligned mode. The counter counts from 0 to the auto-reload value (content of the TIMx_ARR register) -1, generates a counter overflow event, then counts from the auto reload value down to 1 and generates a counter underflow event. Then it restarts counting from 0. The up/down counting defines the center aligned pattern providing a triangular carrier. The overflow and underflow event can be used for ADC triggering. In *Figure 7* the counting in up/down mode provides a triangular carrier. The OC register sets the duty cycle. The overflow event, during the Ton/2, triggers the AD conversion and the result provides the average current value to be used in the control loop.

Overview of inverse buck converter

Figure 7. Counter(a), PWM(b) and I_{LED}(c)

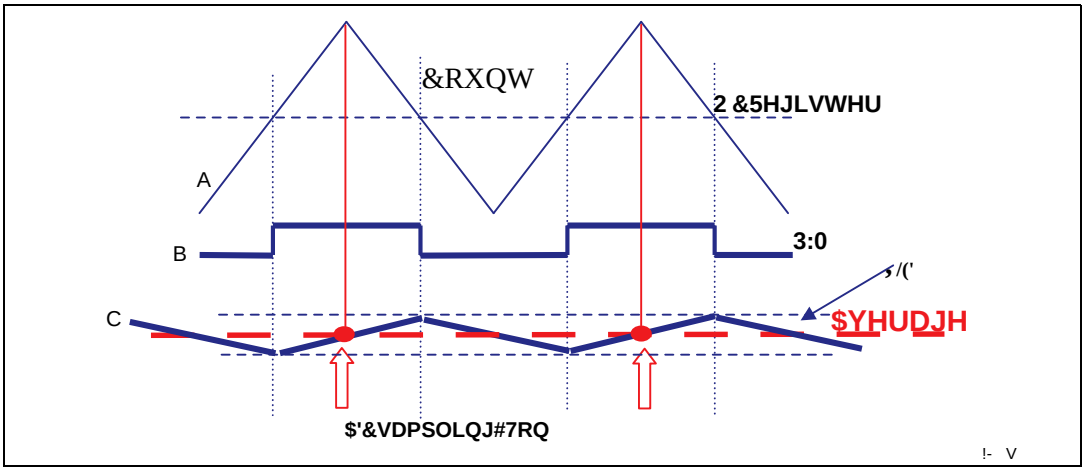

4 Independent current control for a multi-string system

The aim of this control is to implement an average current control on four independent strings in order to cover the entire power rating requirement.

The total power, 120 W, is covered using four strings up to 30 W with ten 3 W LEDs (Everlight, EHP-AX08EL-V4) [4] connected in series.

The ADC peripheral, in terms of maximum conversion time, doesn't allow instantaneous conversion of 4 channels and in order to minimize the error introduced by the sample and hold circuitry a solution based on single-shot conversion is considered.

The advanced timer TIM1 starts the counting in Up/Down mode. The overflow event (crest of carrier waveform) is used for an Update event which triggers the ADC conversion.

The single-shot conversion is enabled on a selected ADC channel. Once the analog to digital conversion is performed, the end of conversion interrupt (EOC ISR) is served and the PI controller changes the duty cycle according to the control law.

Moreover, the new channel to be converted at the next Update event is set and this is repeated cyclically until the four strings are controlled.

The PI controllers, related to the other 3 channels, are not performed at this time. The fourstring control is executed in 4 different Update events.

Figure 8 shows a simple block diagram highlighting the four-string control:

Figure 8. Multi string current control methodology

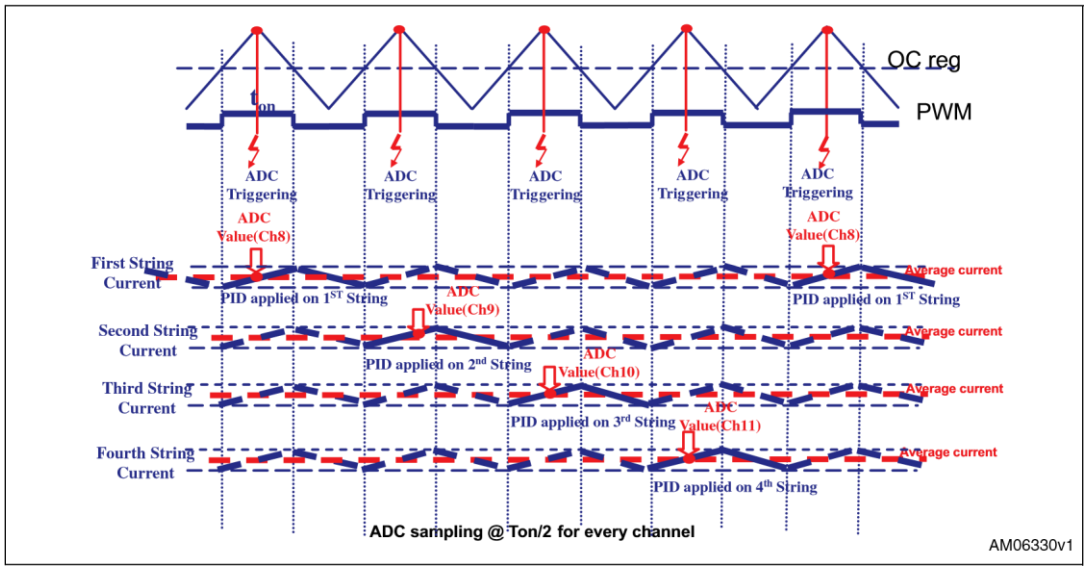

The current control loop is executed as soon as the end of conversion interrupt service routine (EOC ISR) is served.

The Update event, which triggers the ADC for the single shot conversion, occurs once every five PWM Periods.

Although this decreases the system bandwidth, it leaves some time to other important tasks such as communication for remote control.

Independent current control for a multi-string system

A sort of “state machine”, implemented in the EOC ISR, manages the current control on four strings while also looking after the dimming function.

Further details of the multi-string control algorithm follow.

Once the first channel conversion is completed the control checks which string is to be controlled and updates the new value of duty cycle thanks to a PI standard controller.

Once the duty cycle is updated, the control sets the next channel, related to another string to be controlled, which is converted during the next Update event on seven PWM counter overflows.

In short, a single PI controller in the EOC ISR is performed.

The four PIDs are executed in 200 µs calculated in this way:

PWM period=10 µs

The Update event occurs every 5 x PWM period= 50 µs

And, multiplying by 4, the total timing to execute and update the four PI controllers is obtained.

PIDs execution = 200 µs

Figure 9. Basic flowchart

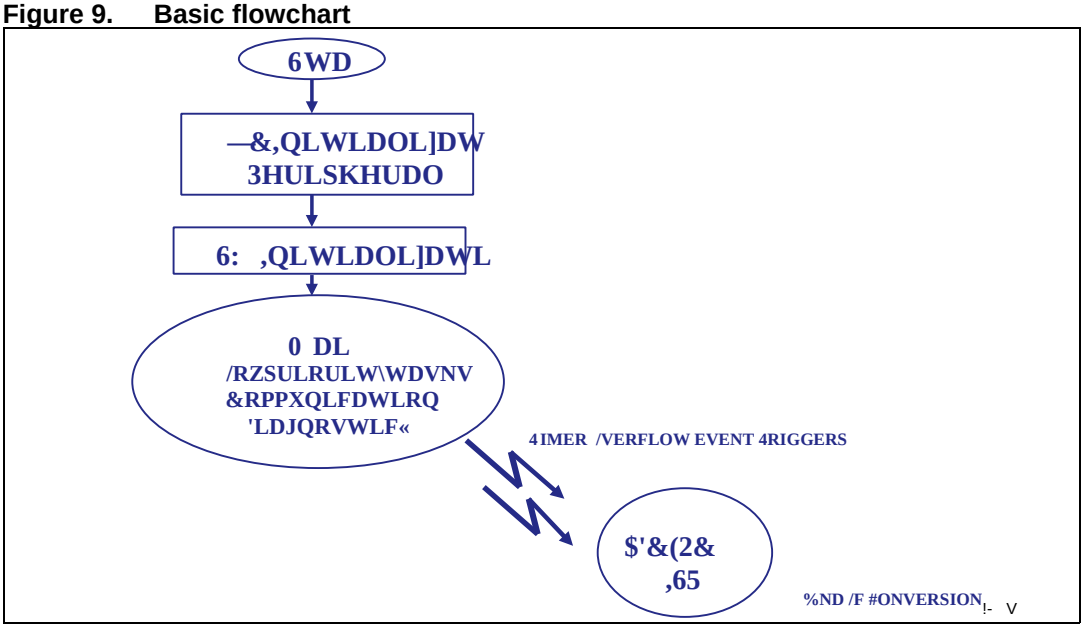

Note: After initialization, wait until interrupt state is entered. The idea is to convert the current and correct the duty cycle of the PWM in order to maintain the same average current level.

In *Figure 10* the basic algorithm flowchart is shown:

- Basic initialization of peripherals, timer synchronization with ADC, interrupts and I/O pins.

- Reading the LED currents the ADC EOC is served and the duty cycle updated. The entire control algorithm is executed into the interrupt routine thanks to PI controllers with anti wind-up in order to regulate the average current at target.

Independent current control for a multi-string system

Figure 10. Current control flowchart

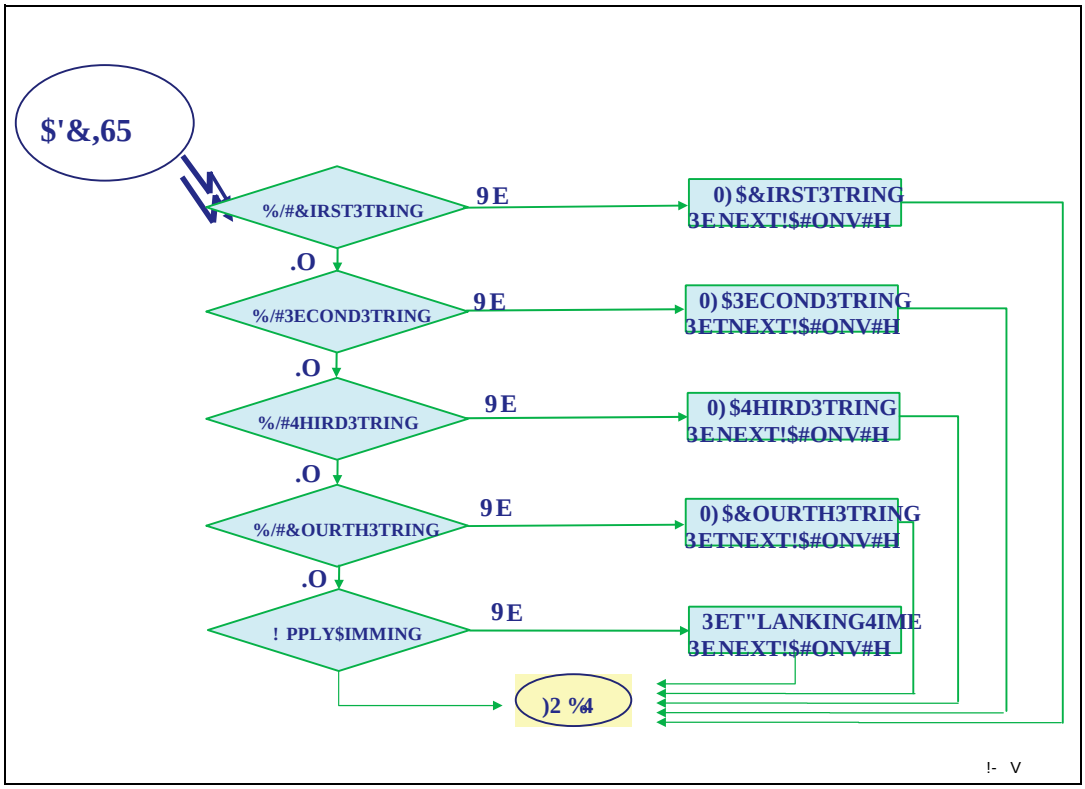

Note: A "state machine" has been implemented into the EOC ISR in order to control either a PI controller or the software dimming function. For any state, the new channel to be converted is set.

5 Firmware implementation

Below are some details of firmware implementation.

It's not an exhaustive firmware implementation description but it mainly focuses on some important microcontroller settings: TIM1, ADC and PI controller implementation.

The firmware developed for the LED Streetlight application is based on STM8S firmware library release 1.1 and entirely downloadable from the internet.

The firmware described in this application note is entirely available; to obtain a copy please contact your closest ST office.

5.1 Basic initialization of peripherals and I/O pins

At the beginning of the main program, all the peripherals and I/O pins are configured as described below:

- The Clock source is selected in order to have the maximum frequency by means of an external 24 MHz oscillator.
- GPIO PINs are configured for: ADC channels (floating input) and I/Os.
- TIMER (TIM1) configuration: Ch1, Ch2, Ch3, and Ch4 are configured in center aligned mode and provide an AD triggering signal to ADC for conversion by TRGO.
- ADC Configuration: AIN8, AIN9, AIN10, AIN11, and AIN12 are converted one by one during the “update” event forced by TIM1. Single shot conversion has been set.

Other firmware settings are for interrupt and joystick/pushbutton management. The joystick, soldered onto the control section, is useful in debug phase to change the PI gains.

This feature is implemented on a low priority interrupt.

5.2 Peripheral settings

The main peripheral settings are:

- Clock configuration
- TIM1 configuration
- ADC configuration

The clock configuration is related to the PRESCALER by means of the function:

```
/* Configure the Fcpu to DIV1*/
  CLK_SYSCLKConfig(CLK_PRESCALER_CPUDIV1);
```

The TIM1 configuration is:

```
TIM1_DeInit();
```

```
          TIM1_TimeBaseInit(0,TIM1_COUNTERMODE_CENTERALIGNED1,
          PWM_PERIOD,5); TIM1_OC1Init(TIM1_OCMODE_PWM2,
          TIM1_OUTPUTSTATE_ENABLE,
TIM1_OUTPUTNSTATE_ENABLE, CCR1_PWM_DEFAULT, TIM1_OCPOLARITY_HIGH,
TIM1_OCNPOLARITY_HIGH, TIM1_OCIDLESTATE_SET,
TIM1_OCIDLESTATE_RESET);


  TIM1_OC2Init(TIM1_OCMODE_PWM2, TIM1_OUTPUTSTATE_ENABLE,
TIM1_OUTPUTNSTATE_ENABLE, CCR2_PWM_DEFAULT, TIM1_OCPOLARITY_HIGH,
TIM1_OCNPOLARITY_HIGH, TIM1_OCIDLESTATE_SET,
TIM1_OCIDLESTATE_RESET);


  TIM1_OC3Init(TIM1_OCMODE_PWM2, TIM1_OUTPUTSTATE_ENABLE,
TIM1_OUTPUTNSTATE_ENABLE, CCR3_PWM_DEFAULT, TIM1_OCPOLARITY_HIGH,
TIM1_OCNPOLARITY_HIGH, TIM1_OCIDLESTATE_SET,
TIM1_OCIDLESTATE_RESET);


TIM1_OC4Init(TIM1_OCMODE_PWM2,TIM1_OUTPUTSTATE_ENABLE,CCR4_PWM_DEFA
ULT,                  TIM1_OCPOLARITY_HIGH,TIM1_OCIDLESTATE_RESET);


/* Configure the TIM1 Master/Slave mode */
TIM1_SelectMasterSlaveMode(ENABLE);


/* Trigger the conversion */
TIM1_SelectOutputTrigger(TIM1_TRGOSOURCE_UPDATE);


 TIM1_CtrlPWMOutputs(ENABLE);


TIM1_Cmd(ENABLE);
```

The ADC Configuration is:

ADC2_DeInit();

```
ADC2_PrescalerConfig(ADC2_PRESSEL_FCPU_D2);


 ADC2_ConversionConfig(ADC2_CONVERSIONMODE_SINGLE,


ADC2_CHANNEL_8, ADC2_ALIGN_RIGHT);
```

```
/* Enable EOC interrupt */
 ADC2_ITConfig(ENABLE);
            /*Configure the ADC2 external trigger */
           ADC2_ExternalTriggerConfig(ADC2_EXTTRIG_TIM, ENABLE);

          ADC2_Cmd(ENABLE);
```

5.3 PI regulator overview and firmware implementation

The general formula for an analog PI regulator is:

Equation 8

$$u(t) = K_P * e(t) + K_I * \int_0^t e(\tau)\, d\tau$$

where:

- μ(t) is the driving signal
- e (t) is the error signal, the difference between the actual value and the target value
- K_P and K_I are the proportional and the integral constant respectively In the case of digital regulators, the above equation becomes:

Equation 9

$$u(n) = K_P * e(n) + K_I * T * \sum_{i=0}^{n} e(i)$$

where:

- μ (n) is the driving signal sampled at the instant nT
- e (n) is the error signal sampled at the instant nT
- K_P, K_I are respectively the proportional and integral gains ● T is the sampling time

The following can also be written:

Equation 10

$$u(n+1) = K_P * e(n+1) + K_I * T * \sum_{i=0}^{n+1} e(i)$$

and, subtracting *Equation 10* from *Equation 9*:

Equation 11

$$[n+1 \qquad n \quad]$$

$$\Delta u(n) = u(n+1) - u(n) = K_P * [e(n+1) - e(n)] + K_I * T * \left[\sum_{i=0} e(i) - \sum_{i=0} e(i) \right]$$

The equation shows the variation of the duty cycle $\Delta\mu(n)$ at the instant nT due to the current error in the same instant (term e(n)) and to its variation at the instants nT and (n-1)T (terms $\Delta e(n)$ and $[\Delta e(n) - \Delta e(n-1)]$).

In the PI algorithm, the error is first computed, and based on this, the variation of the duty cycle is calculated according to the equation, to reach and maintain the target average current.

PI parameters tuning

In order to perform a working average current regulation, it is fundamental to choose the right PI parameters depending on the system's bandwidth.

Unfortunately, to get the best PI parameters, there isn't a general procedure to follow and the fastest way to tune them is trial and error.

However, please note that, besides making the closed loop system stable, the K_P and K_I parameters can also compensate the non-linearity introduced into the system.

PI algorithm

An easy and efficient PI controller is implemented. The algorithm uses an anti Wind-Up effect. This methodology allows the freezing of the integral action when the error signal is out of working range. In this way, it's possible to improve the dynamic of the current loop. In *Figure 11*, below, the diagram of the PI regulator is shown:

Figure 11. PI standard controller with anti-saturation control

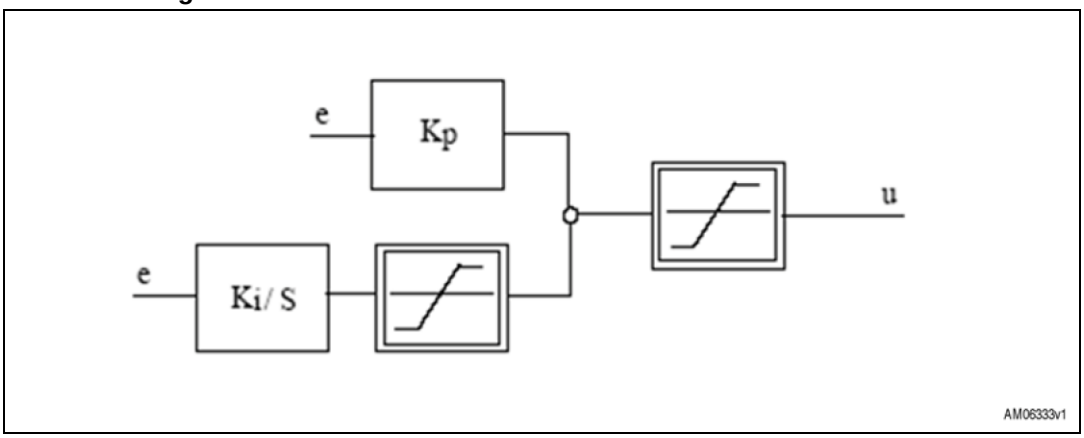

The C code is shown here:

```
/*****************************************************************
* Function Name   : PID_Regulator_FIRST_STRING
* Description     : Compute the PI output for the current loop regulation.
* Input           : none
```

```
* Output          : s16
* Return          : None
*****************************************************************/
s16 PID_Regulator_First(PI_ControllerTYPEDEF *PID, u16 Current_String_Input)
{ s16 Proportional_Term, Integral_Term;

s16 Error, output_s16;

Error = (PID->Reference - Current_String_Input);
  // Proportional term computation
  Proportional_Term = PID->Kp_Gain * Error;
  // Integral term computation   Integral_Term = PID-
>Ki_Gain * Error;
 if ( (Integral_FirstRow >= 0) && (Integral_Term >= 0) &&
(PID>Max_PID_Output == FALSE) )  // freeze integral term in case of
over/underflow
    {  if ( (s32)(Integral_FirstRow + Integral_Term) < 0)
      {Integral_FirstRow = S16_MAX;
      }       or else
      {Integral_FirstRow += Integral_Term;
      }     }
  or else if ((Integral_FirstRow <= 0) && (Integral_Term <= 0) && (PID-
>Min_PID_Output == FALSE) )
    { if ( (s32)(Integral_FirstRow + Integral_Term) > 0)
     { Integral_FirstRow = -S16_MAX;      }
or else
     {Integral_FirstRow += Integral_Term;
     }     }   or else if ( (Integral_FirstRow <= 0) && (Integral_Term >=
0) )
    {Integral_FirstRow += Integral_Term;
    }   or else if ( (Integral_FirstRow >= 0) && (Integral_Term <= 0) )
    {Integral_FirstRow += Integral_Term;
    }
  output_s16 = (s16)((Proportional_Term>>12) +
```

```
(Integral_FirstRow>>16));     if (output_s16 >= (s16)(PID-
>Upper_Limit_Output))
      {PID->Max_PID_Output = TRUE;       return(PID->Upper_Limit_Output);
      }     or else if (output_s16 < (s16)(PID->Lower_Limit_Output))
      { PID->Min_PID_Output = TRUE;       return(PID->Lower_Limit_Output);
      }     or else
      {PID->Min_PID_Output = FALSE;       PID->Max_PID_Output = FALSE;
return((s16)(output_s16));
       }
}
```

6 Board description

The evaluation board is configured as constant current supply.

Table 2 gives some details of the board:

Table 2. Board description

Reference designator	Name	Description
J2	J2	DC input voltage(48 V)
J26	J26	Logic input voltage (5 V)
J11	Swim connector	Programming connector
SW1	Reset button	Reset the microcontroller
P1	Trimmer	Trimmer for dimming

Figure 12. LED street light platform

7 Experimental results

Please note that the streetlight platform has been validated with Everlight LEDs [*4*].

Others kinds of LEDs may require some control parameter tuning. The joystick soldered onto the control section can be useful in order to increase/decrease the proportional and integral gains and set the control.

Figures *13*, *14*, *15*, and *16* show the experimental results:

Figure 13. I_{LED} on 3 strings (green, blue and violet waveforms); PWM @100 kHz (yellow waveform)

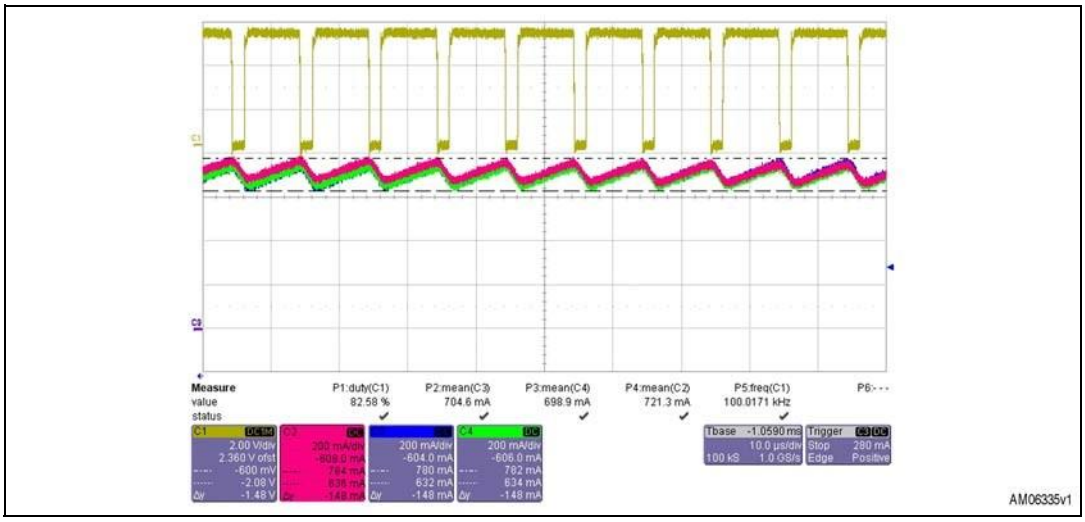

Figure 14. I_{LED} on 3 strings (green, blue and violet waveforms); voltage across the sense resistor (yellow waveform)

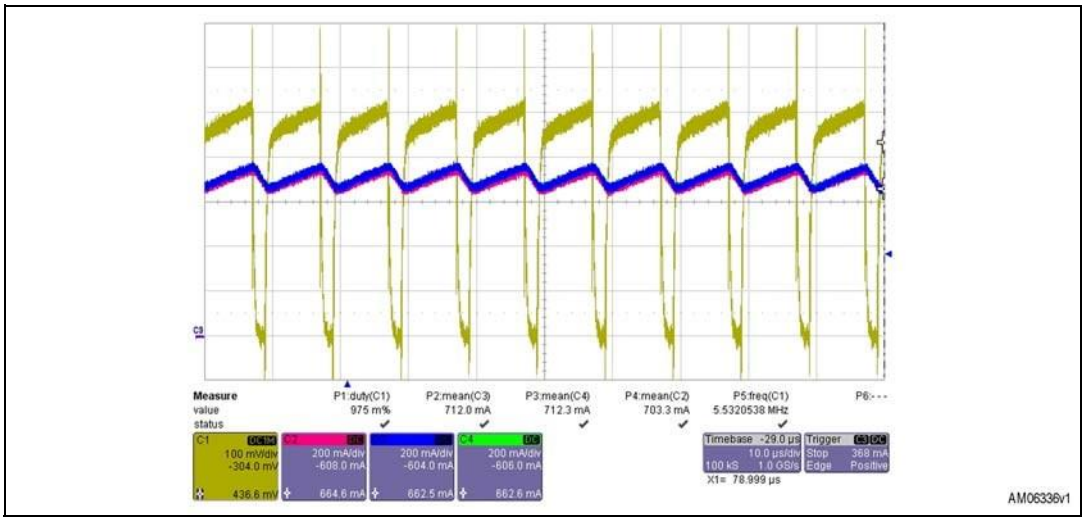

Experimental results

Figure 15. I_{LED} on 3 strings (green, violet and blue waveforms) @ 60% of duty cycle (PWM dimming)

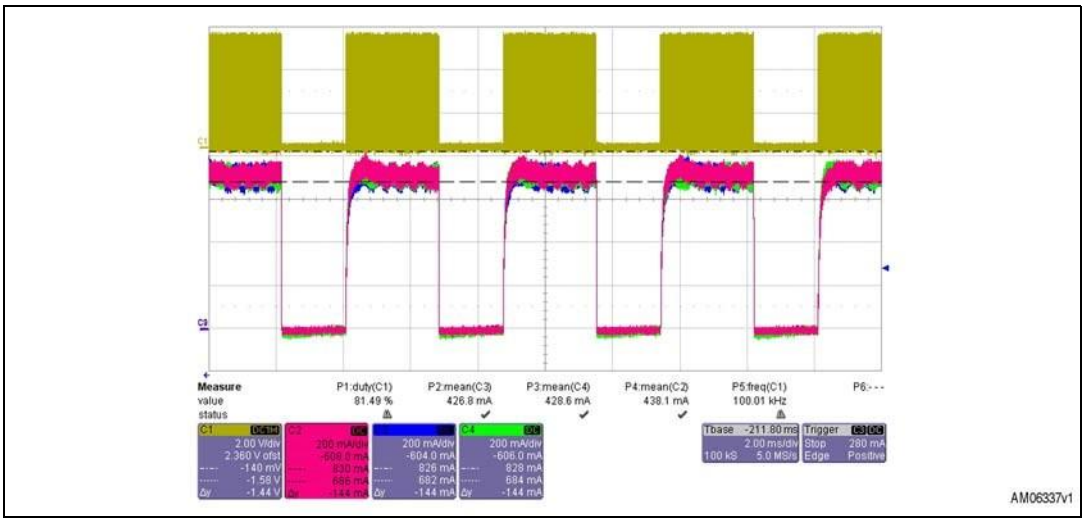

Figure 16. I_{LED} on string (violet waveform) @ minimum PWM dimming; PWM (yellow waveform)

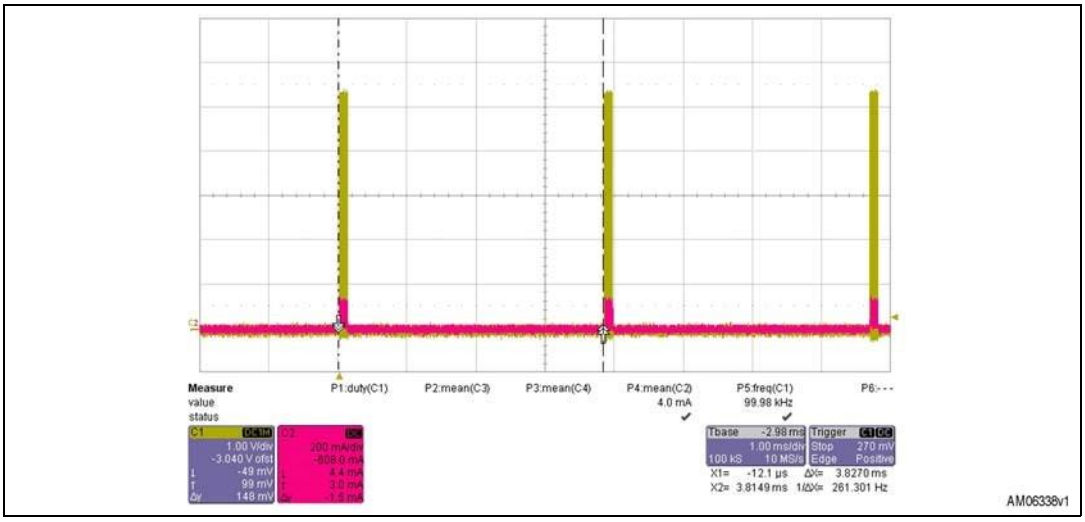

Experimental results

Some important information related to the power switches is also detailed. Figures *17*, *18*, and *19* show some power dissipation issues and the total efficiency estimation:

Figure 17. MOSFET turn-on zoom

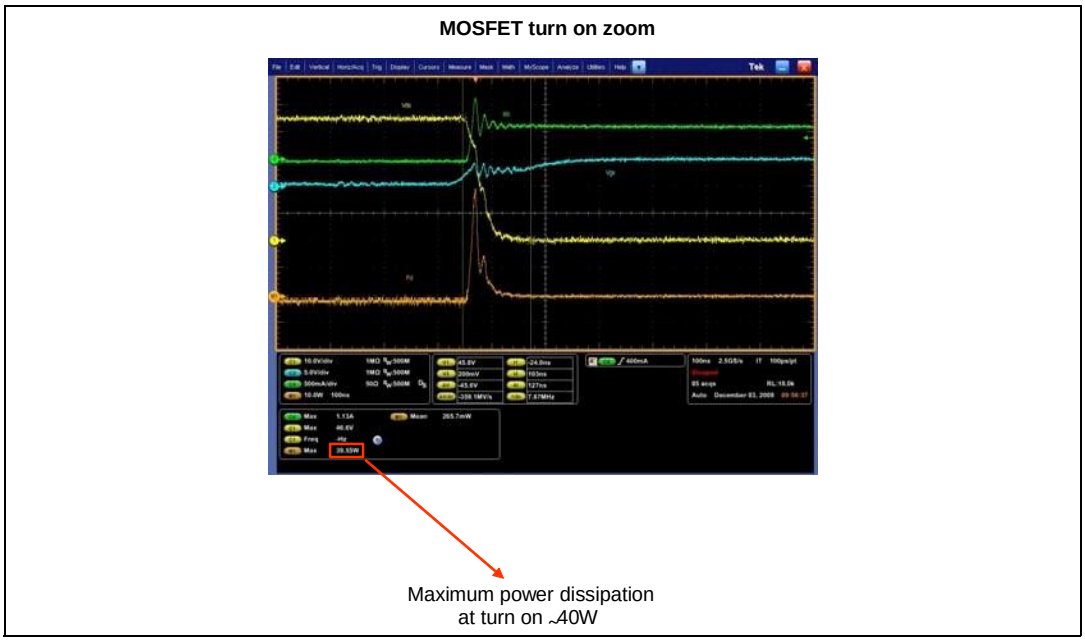

Figure 18. MOSFET turn-off zoom

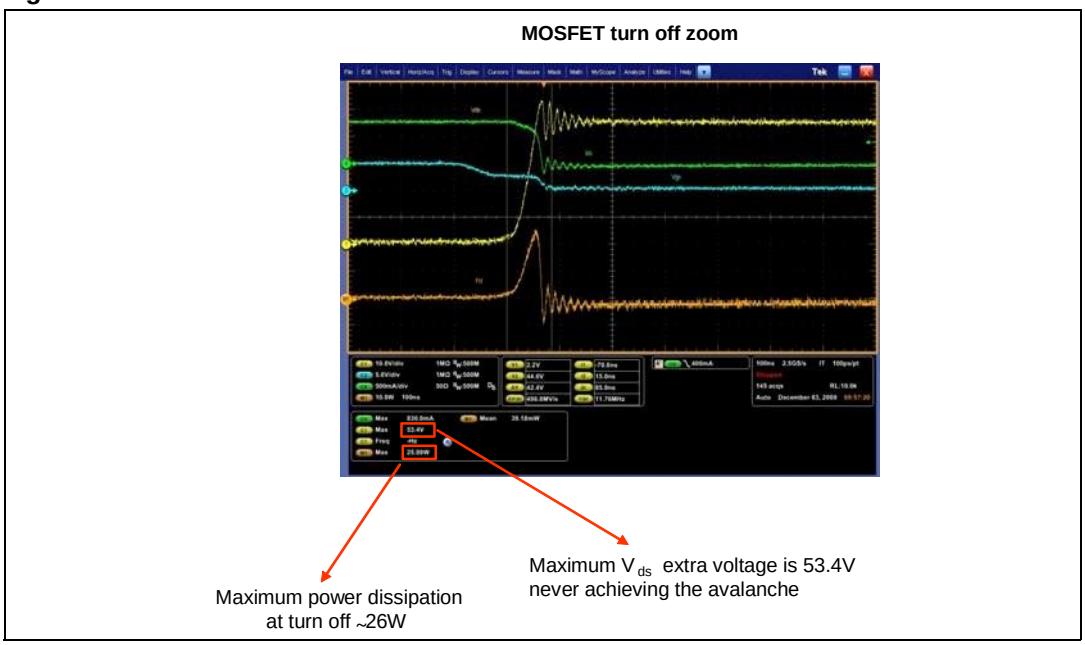

Experimental results

Overall efficiency (4 channels)

Figure 19.

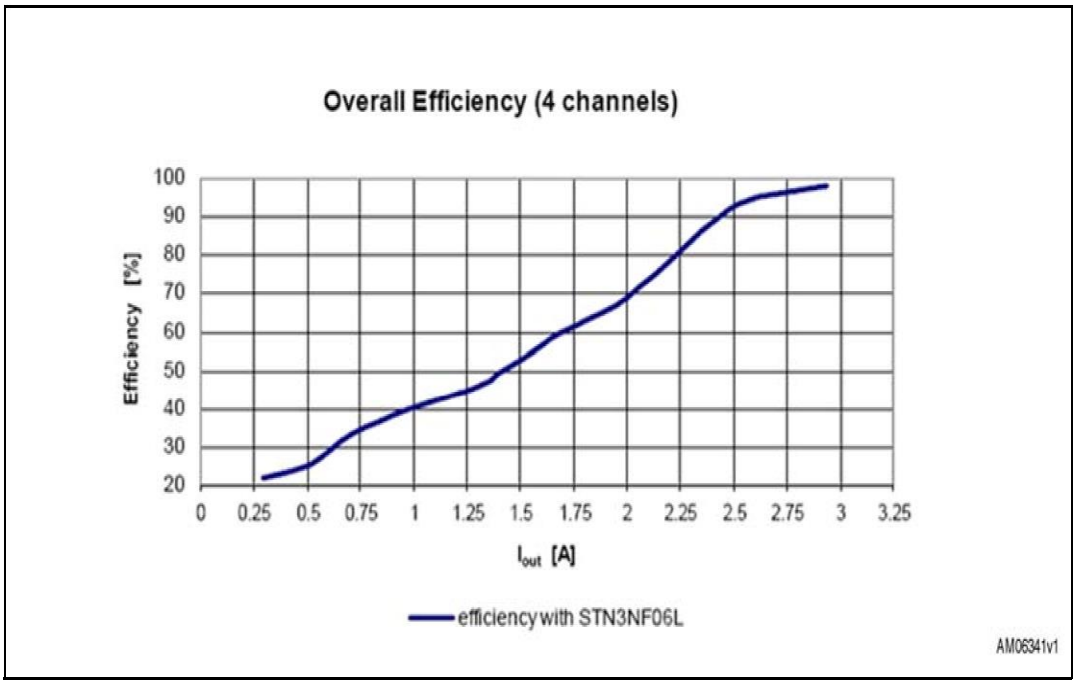

8 Short-circuit protection

Failure protection is managed by the microcontroller and allows hardware damage to be avoided. This feature has not been implemented on the STEVAL-ILL031V1 but, if necessary, the following circuitry can be taken into consideration (*Figure 20*).

Figure 20. Short-circuit protection circuitry

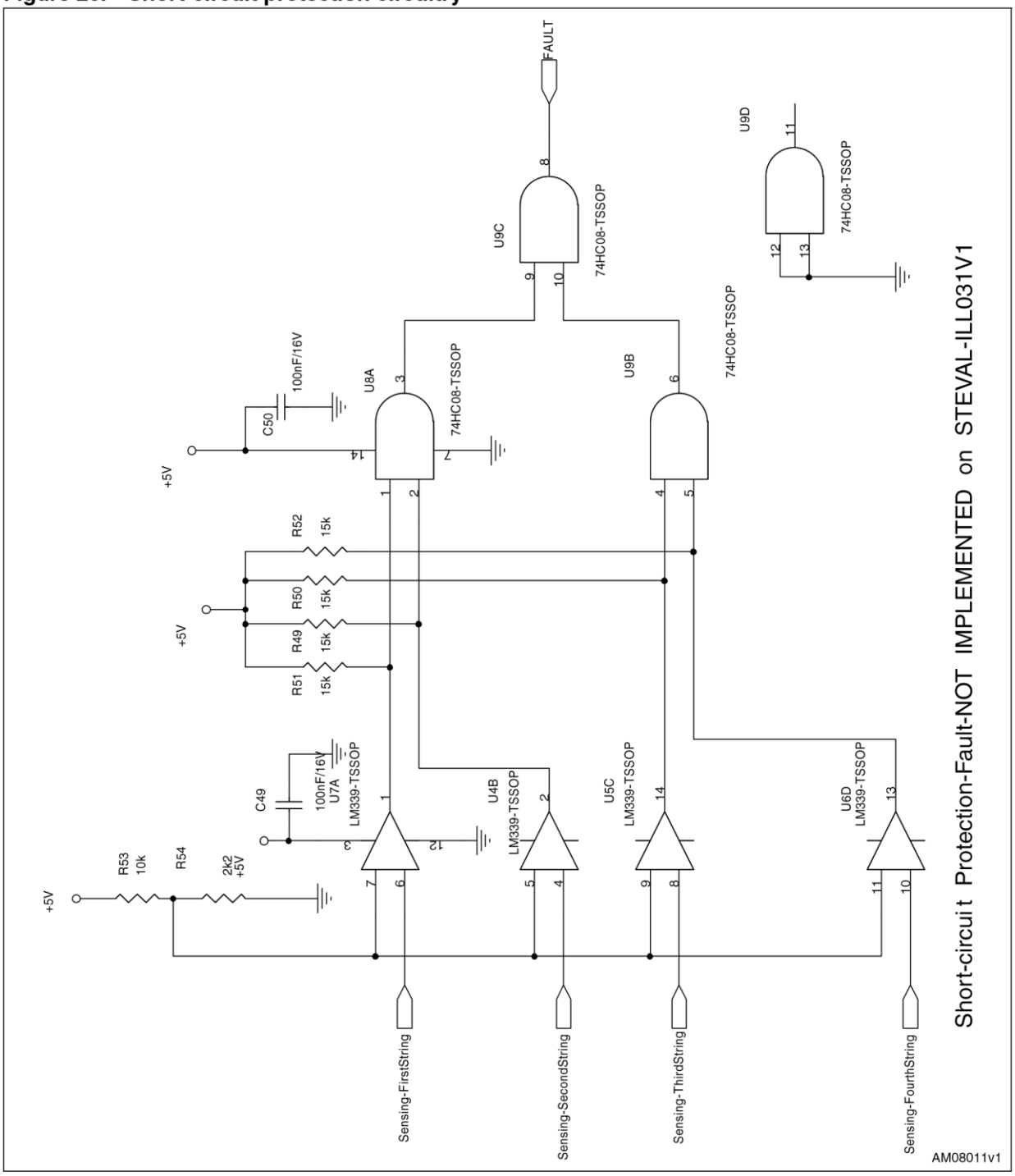

Short-circuit protection

Short-circuit protection is implemented by means of a simple external circuitry based on:

- Low-power quad voltage comparator (LM339)
- Quad 2 input AND gate(74HC08)

The sensing signal is compared with an external reference set by a voltage divider providing an active low output on each string.

The four outputs are in AND in order to have a single FAULT signal, which is an input managed by the microcontroller thanks to the TIM1_BKIN pin.

When TIM1_BKIN input (*Figure 4*) is active, with a programmable polarity, the output stage control disables all channels in order to protect the hardware.

Figure 21 shows a short-circuit event managed by the TIM1_BKIN.

Figure 21. Short-circuit event

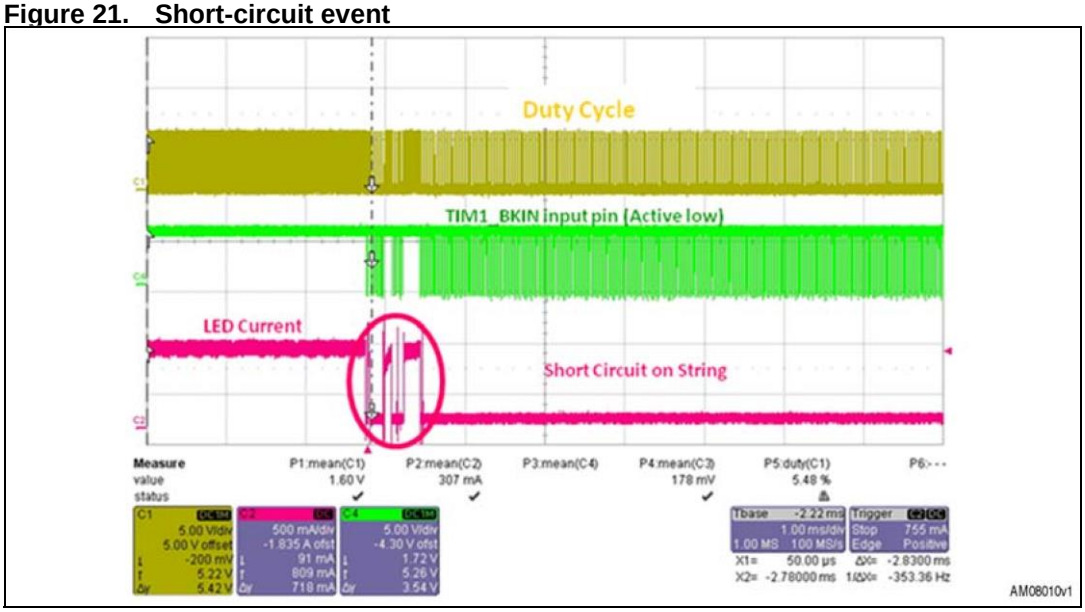

Bill of material

9 Bill of material

Table 3. BOM

Reference	Part / value	Technology information	Package	Manufacturer	Manufacturer code
C1,C4,C7,C10	220 nF	Ceramic cap.			
C2,C5,C8,C11	47 µF	Cap poly rad.			
C3,C6,C9,C12	220 pF	SMD mult.ceramic cap.	0805		
C41,C44	100 nF	SMD mult.ceramic cap.	0805		
C43	10 µF	Cap poly rad.	0805		

D1,D2,D3,D4	STPS1L60	Power Schottky rectifier		STMicroelectronics	STPS1L60
D10	LED diode		1206		
J1,J2,J3,J5,J7, J26		Connector	TH		
J4	PWM connector	Connector-female	TH		
J6	Sensing connector	Connector-female	TH		
L1,L2,L3,L4	820 uH	Inductor		Wurth electronics Inc	7447709821
Q1,Q2,Q3,Q4	STN3NF06	STripFET™ II power MOSFET	SOT223	STMicroelectronics	STN3NF06
R2,R5,R56, R11	620 Ω	Thick film resistor	1206		
R1	10 Ω		1206		
R3,R6,R9,R12	0.68 Ω	Thick film resistor	1206	Cyntec	RLT16324R680FN-06
R7,R10,R60	10 Ω	Thick film resistor	1206		
R47	1 kΩ	Thick film resistor	1206		

Another inductor has been tested on this platform. Better results in terms of efficiency were achieved thanks to a lower DC resistance. For mechanical space reasons these inductors have not been used in the power stage.

For any efficiency tests consider also the MURATA power inductor with 1.5 mH up to 1.3 A (1415513C).

Bill of material

Figure 22 gives some technical information related to the Everlight LED:

Figure 22. Electro-optical characteristics

Maximum Ratings ($T_{Soldering}$=25ºC)

Parameter	Symbol	Rating	Unit
DC Operating Current	I_F	750	mA
Pulsed Forward Current(1)	I_{PF}	1000	mA
ESD Sensitivity	ESD	2000	V
Junction Temperature	T_j	125	℃
Operating Temperature	$T_{op.}$	-40 ~ +85	℃
Storage Temperature	$T_{stge.}$	-40 ~ +100	℃
Junction To Heat-Sink Thermal Resistance	R_{th}	9	℃ /W

Electro-Optical Characteristics ($T_{Soldering}$=25ºC)

Parameter	Bin	Symbol	Min	Typ.	Max	Unit	Condition
Luminous Flux (2)	----	Φ_v	130	140	----	lm	I_F=700mA
Forward Voltage(3)	V2	V_F	3.25	----	3.55	V	
	V3		3.55	----	3.85		
	V4		3.85	----	4.15		
	V5		4.15	----	4.45		
Color Temperature	----	*CCT*	5650	6300	7000	K	

Note.

1. tp ≤100 μs, Duty cycle = 0.25
2. Luminous Flux measurement tolerance: ±10%.
3. Forward Voltage measurement tolerance: ±0.1V.

AM06342v1

10 References

1. STM8S reference manual; *RM0016*
2. STM8S207xx/STM8S208xx datasheet; *Performance line, 24 MHz STM8S 8-bit MCU, up to 128 Kbytes Flash, integrated EEPROM, 10-bit ADC, timers, 2 UARTs, SPI, I^2C, CAN*
3. AN2928 application note; *Modified buck convertor for LED applications*
4. Everlight high power LED-3W: EHP-AX08EL/GT01H-P03/5670/Y/N11-V4

11 Revision history

Table 4. Document revision history

Date	Revision	Changes
24-Aug-2010	1	Initial release.

Please Read Carefully:

Information in this document is provided solely in connection with ST products. STMicroelectronics NV and its subsidiaries (“ST”) reserve the right to make changes, corrections, modifications or improvements, to this document, and the products and services described herein at any time, without notice.

All ST products are sold pursuant to ST’s terms and conditions of sale.

Purchasers are solely responsible for the choice, selection and use of the ST products and services described herein, and ST assumes no liability whatsoever relating to the choice, selection or use of the ST products and services described herein.

No license, express or implied, by estoppel or otherwise, to any intellectual property rights is granted under this document. If any part of this document refers to any third party products or services it shall not be deemed a license grant by ST for the use of such third party products or services, or any intellectual property contained therein or considered as a warranty covering the use in any manner whatsoever of such third party products or services or any intellectual property contained therein.

UNLESS OTHERWISE SET FORTH IN ST’S TERMS AND CONDITIONS OF SALE ST DISCLAIMS ANY EXPRESS OR IMPLIED WARRANTY WITH RESPECT TO THE USE AND/OR SALE OF ST PRODUCTS INCLUDING WITHOUT LIMITATION IMPLIED WARRANTIES OF MERCHANTABILITY, FITNESS FOR A PARTICULAR PURPOSE (AND THEIR EQUIVALENTS UNDER THE LAWS OF ANY JURISDICTION), OR INFRINGEMENT OF ANY PATENT, COPYRIGHT OR OTHER INTELLECTUAL PROPERTY RIGHT.

UNLESS EXPRESSLY APPROVED IN WRITING BY AN AUTHORIZED ST REPRESENTATIVE, ST PRODUCTS ARE NOT RECOMMENDED, AUTHORIZED OR WARRANTED FOR USE IN MILITARY, AIR CRAFT, SPACE, LIFE SAVING, OR LIFE SUSTAINING APPLICATIONS, NOR IN PRODUCTS OR SYSTEMS WHERE FAILURE OR MALFUNCTION MAY RESULT IN PERSONAL INJURY, DEATH, OR SEVERE PROPERTY OR ENVIRONMENTAL DAMAGE. ST PRODUCTS WHICH ARE NOT SPECIFIED AS "AUTOMOTIVE GRADE" MAY ONLY BE USED IN AUTOMOTIVE APPLICATIONS AT USER’S OWN RISK.

Resale of ST products with provisions different from the statements and/or technical features set forth in this document shall immediately void any warranty granted by ST for the ST product or service described herein and shall not create or extend in any manner whatsoever, any liability of ST.

ST and the ST logo are trademarks or registered trademarks of ST in various countries.

Information in this document supersedes and replaces all information previously supplied.

The ST logo is a registered trademark of STMicroelectronics. All other names are the property of their respective owners.

© 2010 STMicroelectronics - All rights reserved

STMicroelectronics group of companies

Australia - Belgium - Brazil - Canada - China - Czech Republic - Finland - France - Germany - Hong Kong - India - Israel - Italy - Japan - Malaysia - Malta - Morocco - Philippines - Singapore - Spain - Sweden - Switzerland - United Kingdom - United States of America